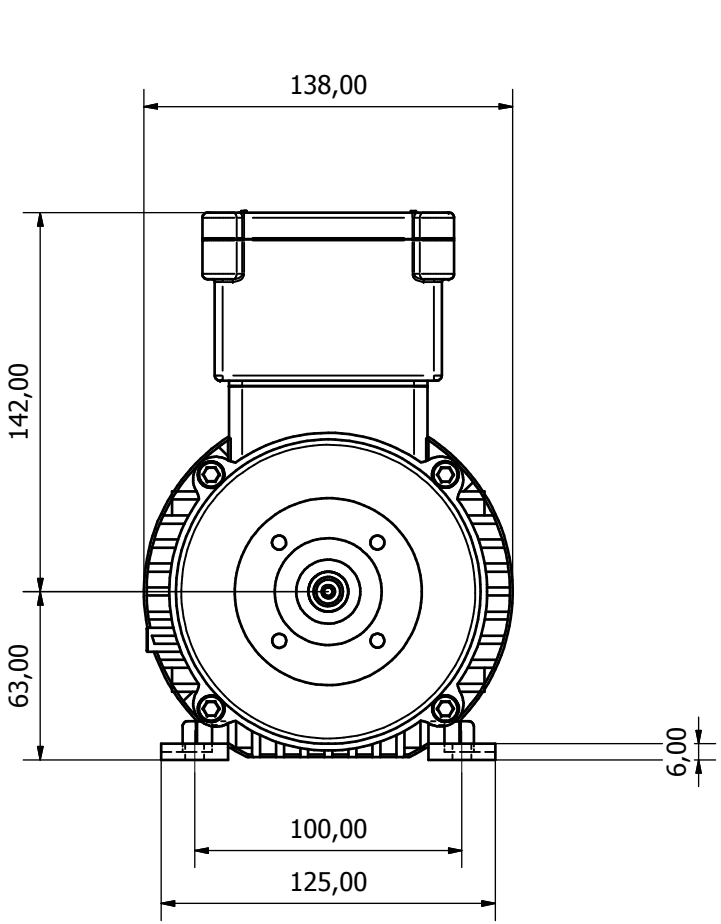

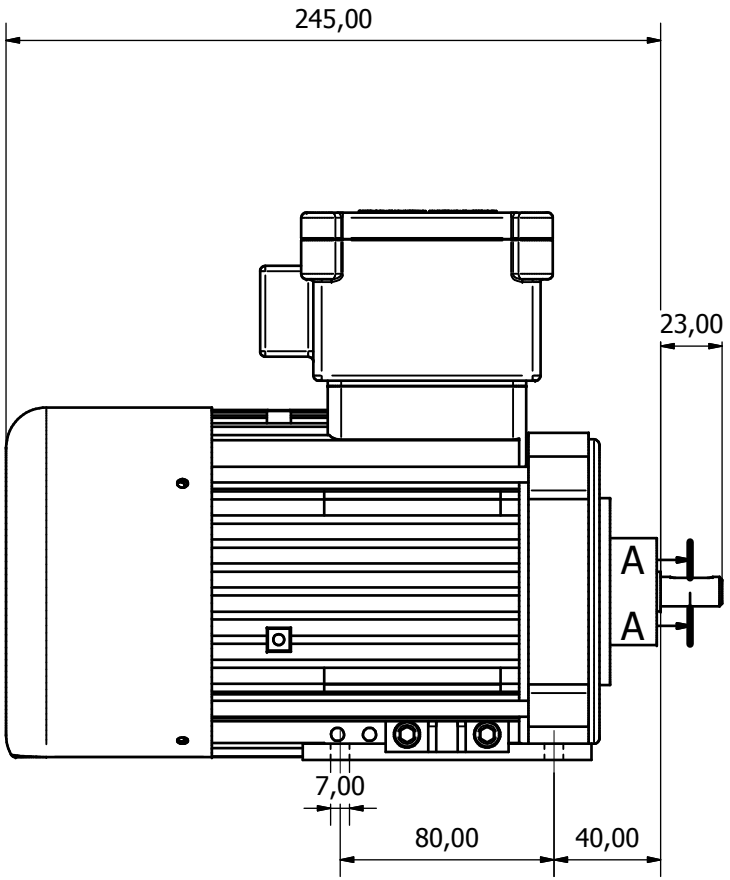

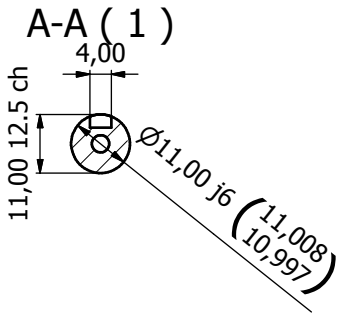

Designed by	Checked by	Approved by	Date		Date	
WP					15/07/2020	

RAEL motori elettrici srl	RL 63 b3 chk2020	Edition	Sheet 1 / 1