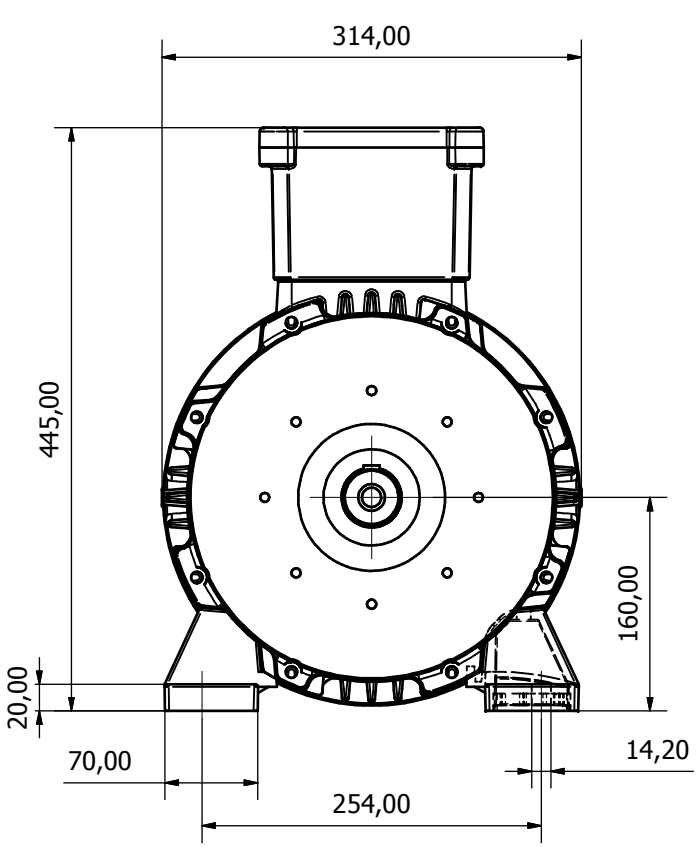

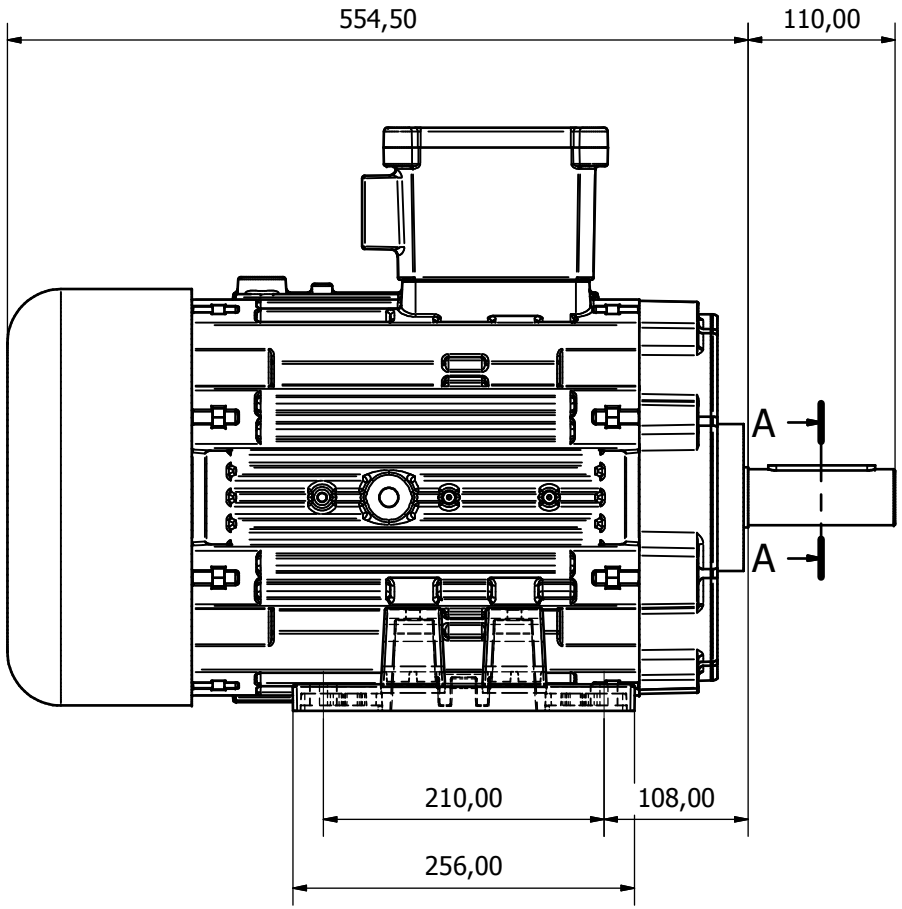

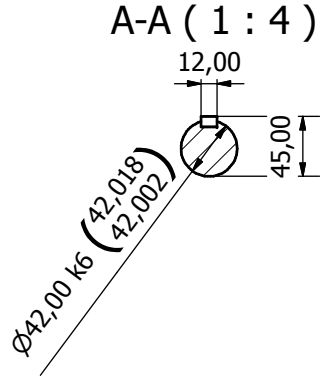

Designed by	Checked by	Approved by	Date		Date	
WP					03/02/2020	

RAEL motori elettrici srl	RL160M B3 PC chk2019	Edition	Sheet 1 / 1