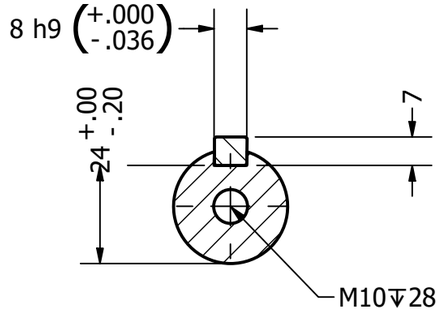

SECTION A-A
SCALE 2:3

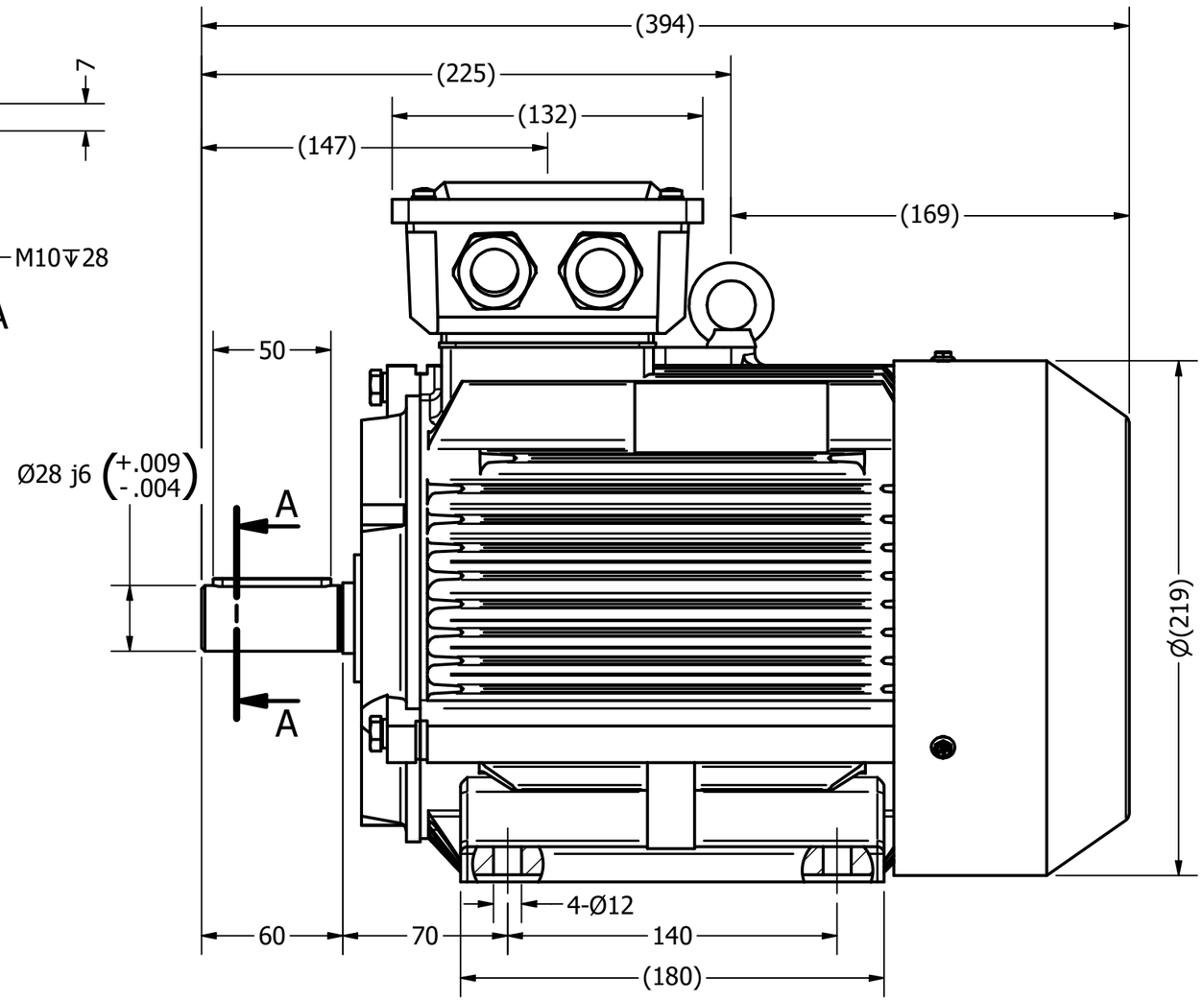

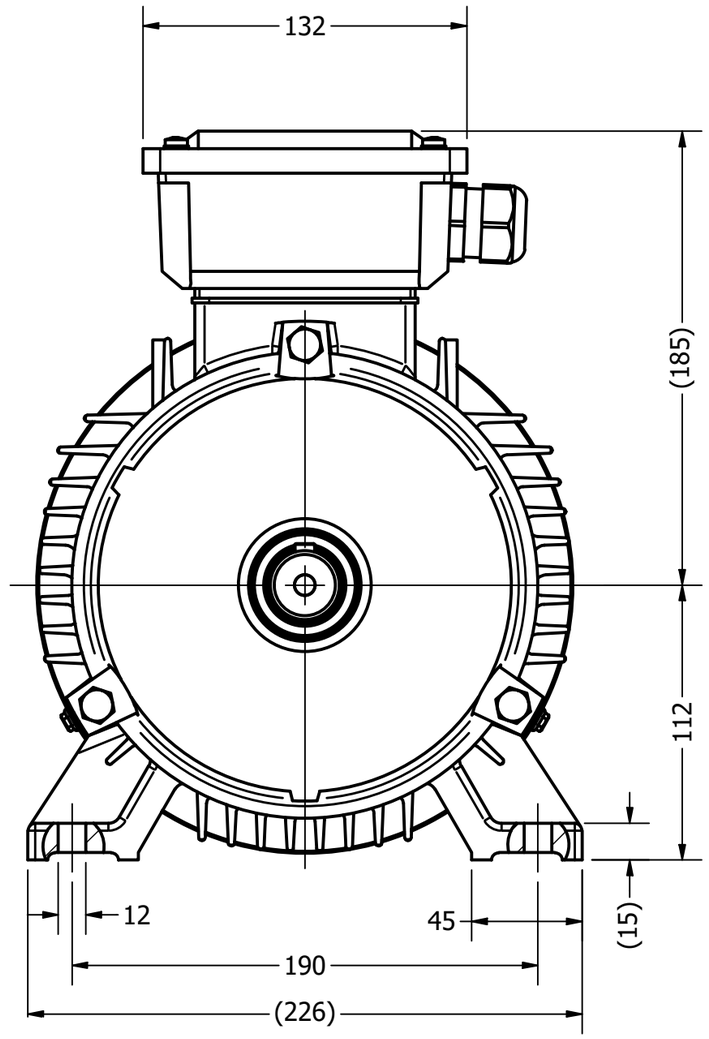

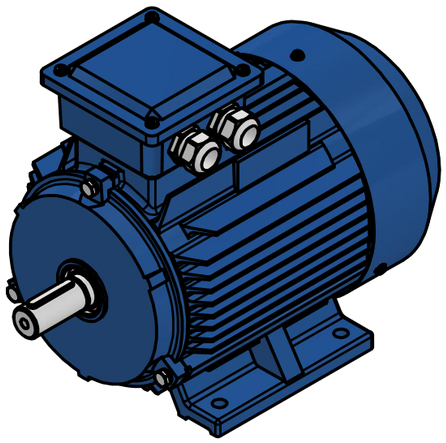

Remarks:

1. Glands: 1 off M25 x 1.5 and 1 off M16 x 1.5, Blanking plug 1 off M25 x 1.5
2. Eye bolt M8

DRAWN LukeSnellings	02/06/2025	AMTECS LTD
CHECKED Oliver Young	25/06/2025	TITLE
QA		AM3-IE3 112M2 (B3)
MFG		
APPROVED		
		SIZE A3 / DWG NO AM3-IE3 112M2 (B3) / REV
		SCALE 1 : 2.5 / SHEET 1 OF 1