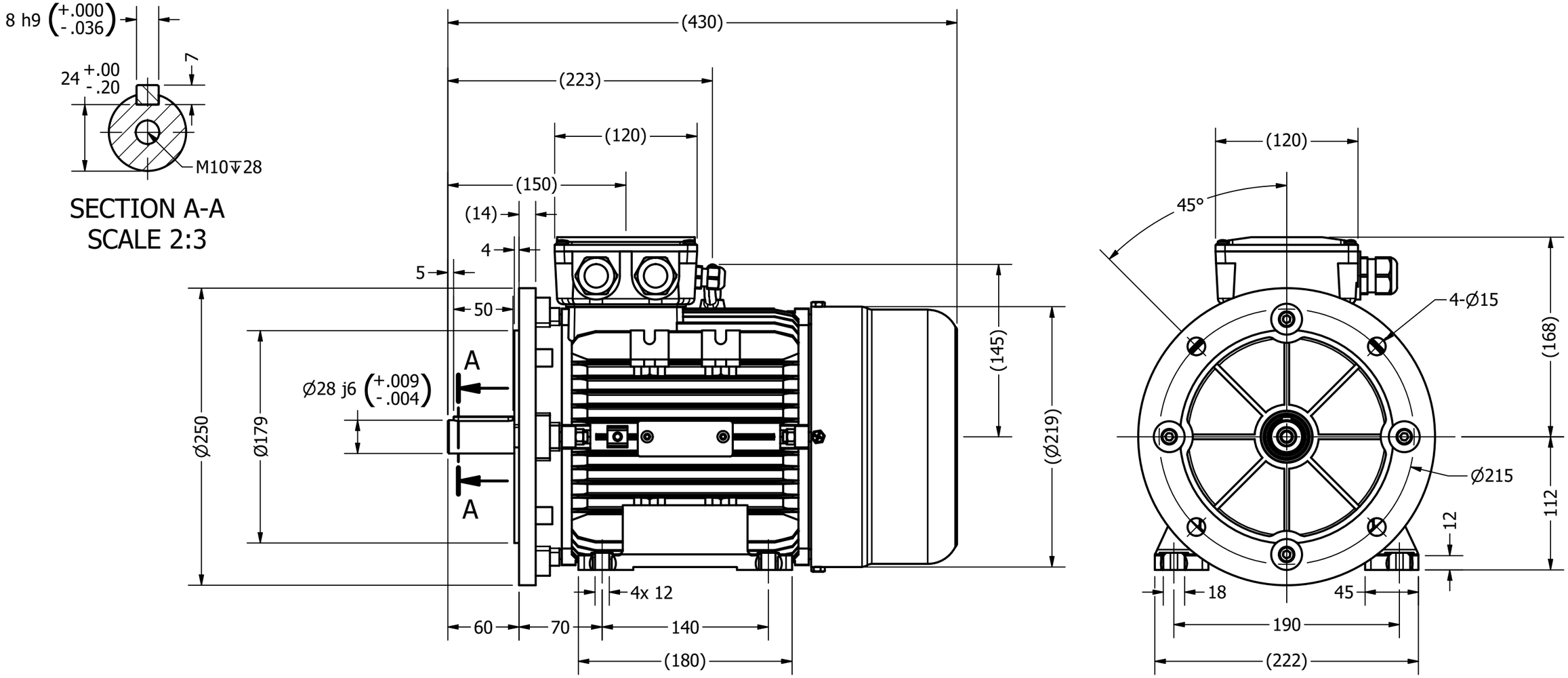

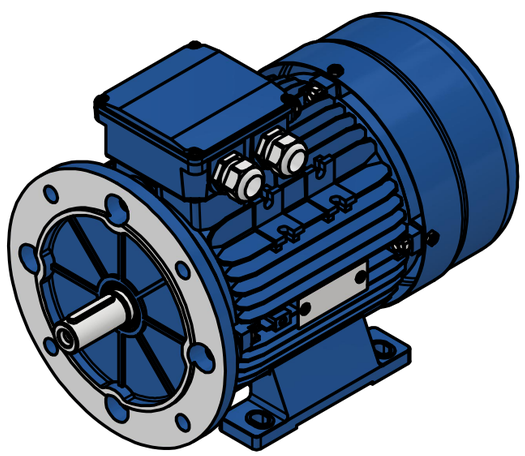

Remarks:

1. Glands: 1 off M25 x 1.5 and 1 off M16 x 1.5, Blanking plug 1 off M25 x 1.5
2. Eye bolt M8

DRAWN JamesSouter	01/10/2024	AMTECS LTD
CHECKED Oliver Young	03/10/2024	TITLE AMA3-IE3 112M4 (B35)
QA		
MFG		
APPROVED		SIZE A3 / DWG NO AMA3-IE3 112M4 (B35) / REV
		SCALE 1:5 / SHEET 1 OF 1