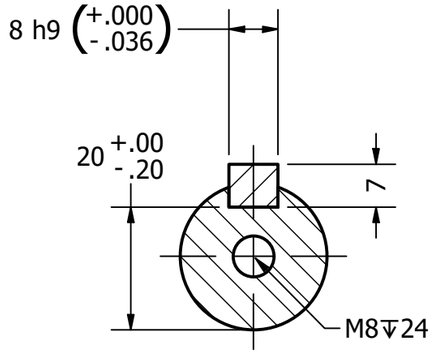

SECTION A-A
SCALE 1 : 1

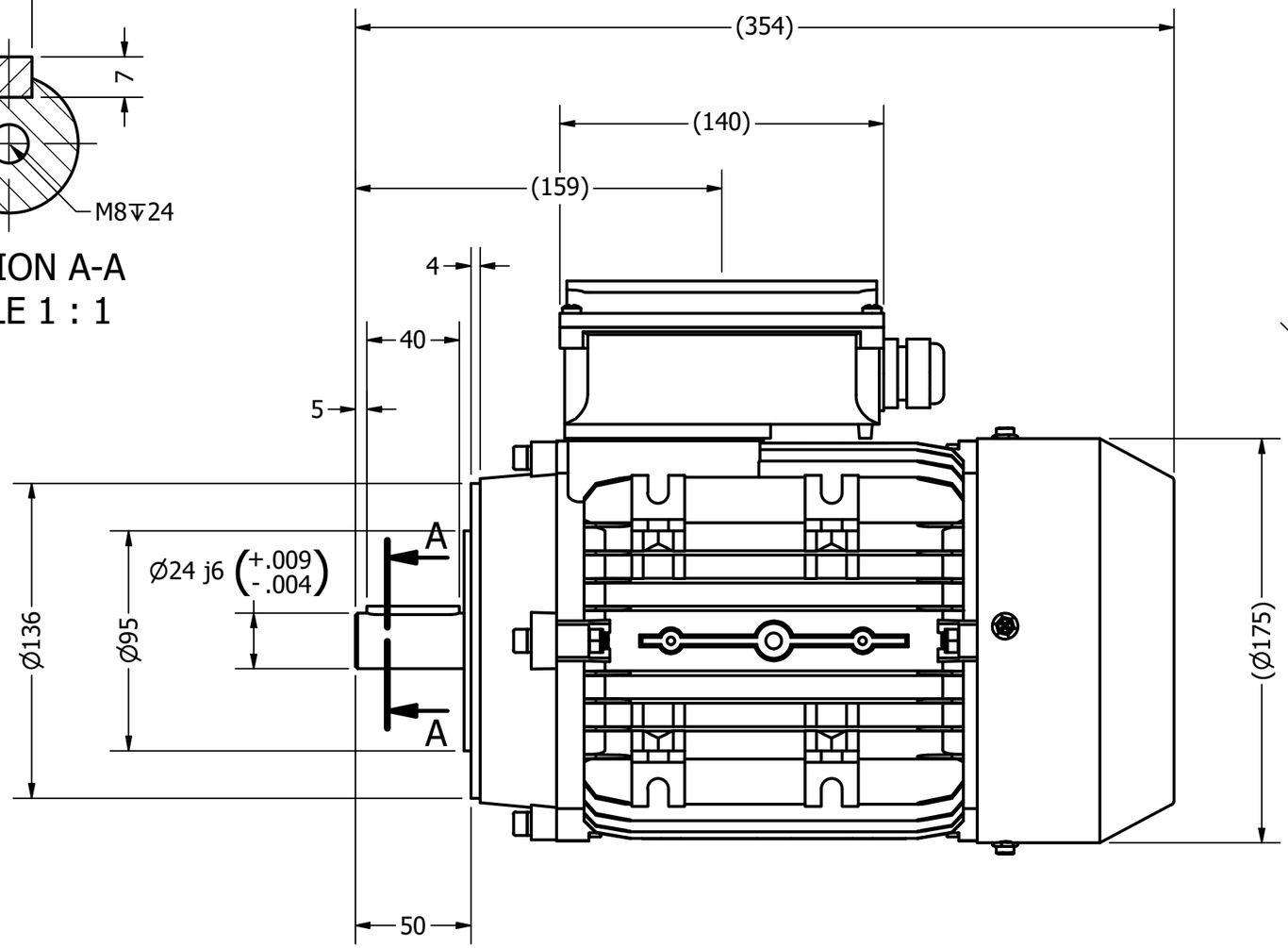

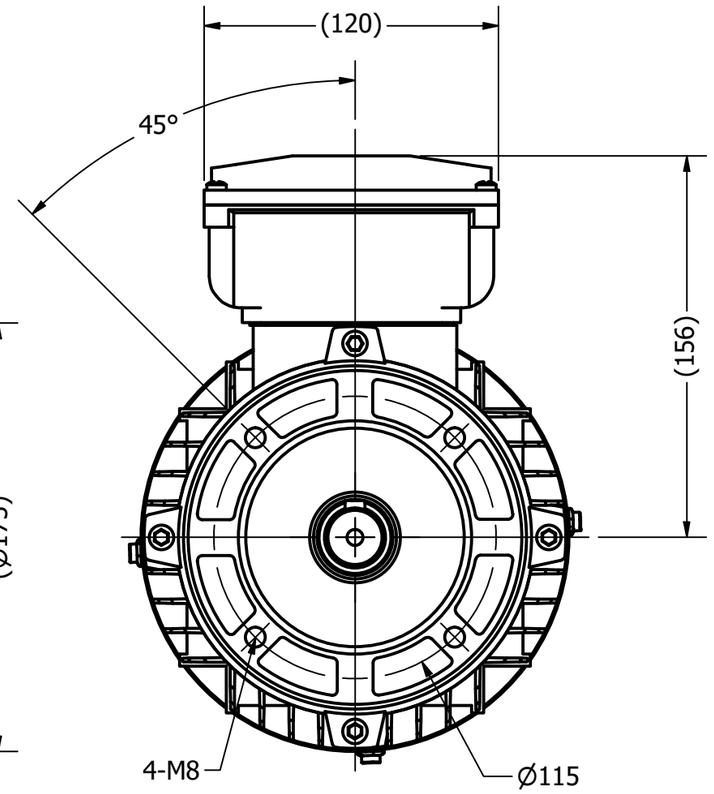

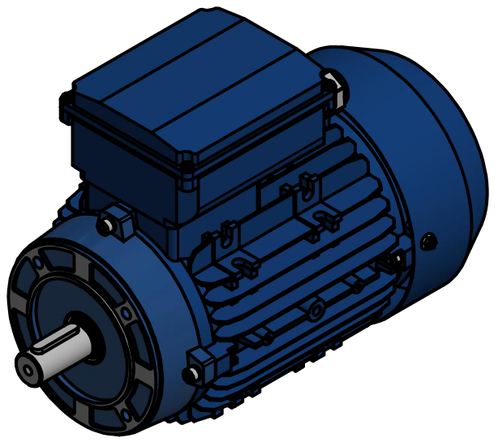

DRAWN LukeSnellings	14/07/2026	AMTECS	
CHECKED		TITLE AMAS-R-IE2 90L4 (B14S)	
QA			
MFG			
APPROVED			
		SIZE A3	DWG NO AMAS-R-IE2 90L4 (B14S) REV
		SCALE 2 / 5	SHEET 1 OF 1