8 h9 (+.000 -.036)

20 +.00 -.20

7

M8↧24

SECTION A-A
SCALE 1 : 1

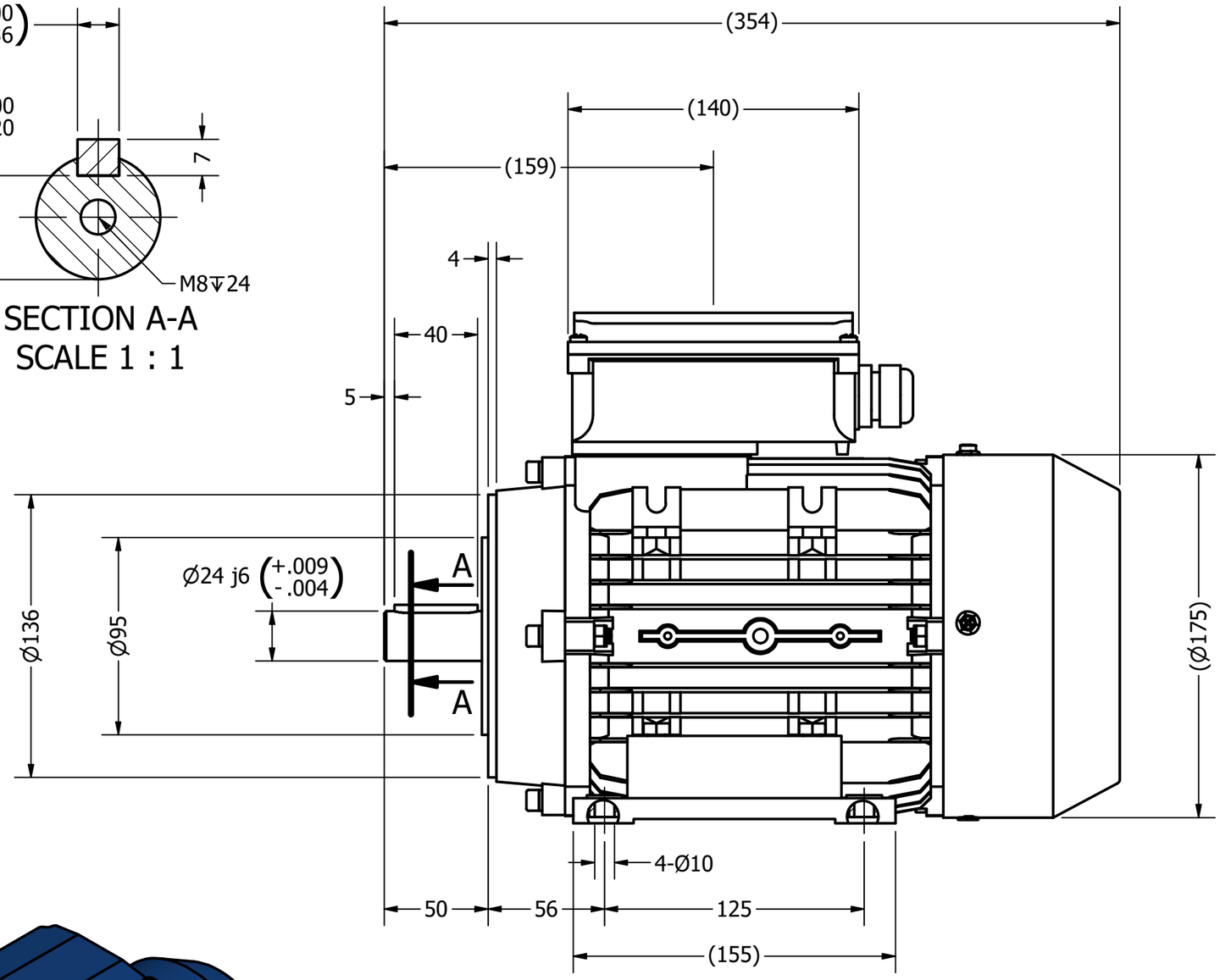

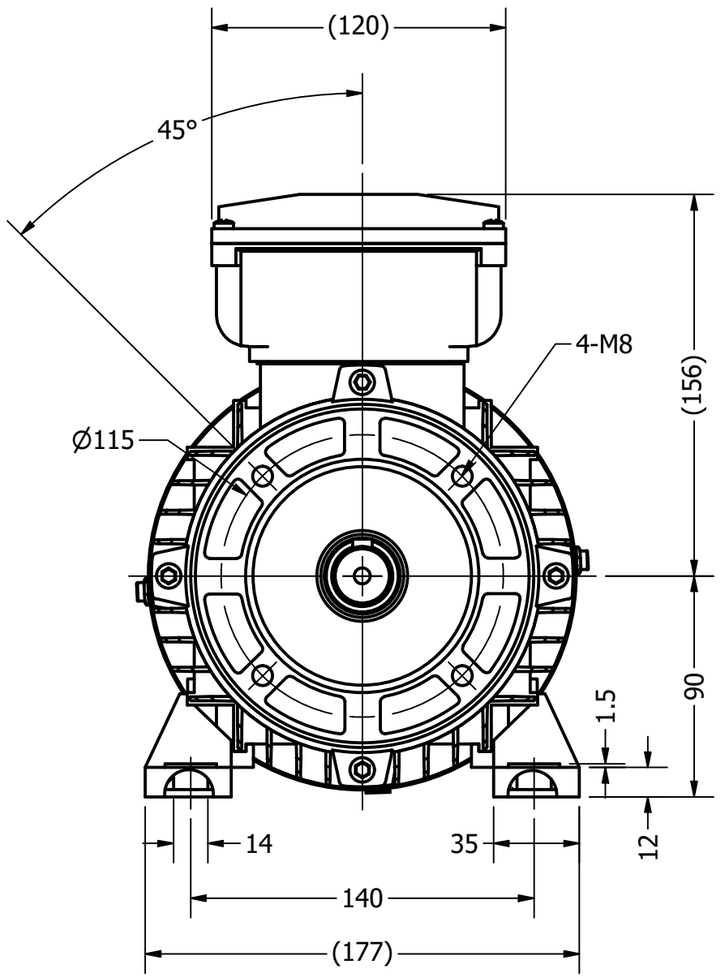

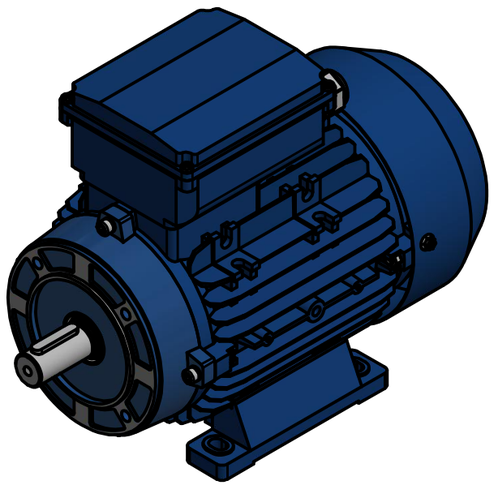

DRAWN LukeSnellings	15/07/2026	AMTECS
CHECKED		TITLE: AMAS-R-IE2 90L4 (B34S)
QA		
MFG		
APPROVED		
		SIZE A3 · DWG NO AMAS-R-IE2 90L4 (B34S) · REV
		SCALE 2 / 5 · SHEET 1 OF 1