AMA3-IE3 132M4 (B34L)

AMTECS

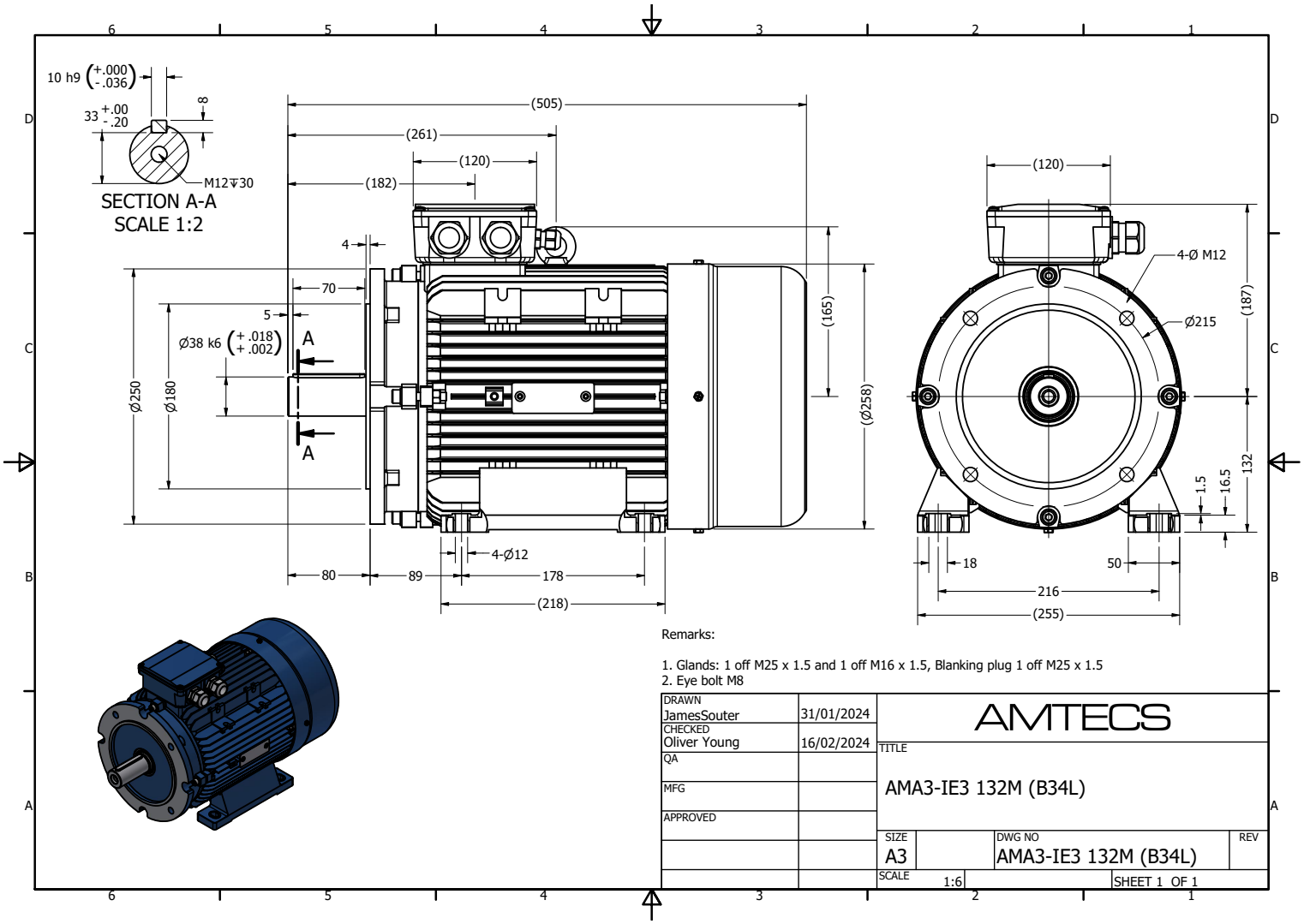

Specification	**IEC 60034-1**
Manufacturer	**AmTecs**
Motor type	**AMA3-IE3 132M4**
Rated power	**7.5** kW **S1** Duty
Speed	**1460** rpm
Voltage	**400V / 690V**
Frequency	**50** Hz
Connection	**Delta / Star**
Full load current	**14.3 A / 8.26 A**
No-load current	
Enclosure	**IP55**
Insulation class	**F (temp. rise B)**
Max. ambient temp	**40** °C
Max. altitude	**1000** mtr above sea level
Comment	
Cable entry	**M25 x 1.5**
Construction	**Aluminium**
Weight	**66** Kg
Type number	
Warranty	

Efficiency class				**IE3**	
Load data	100%	75%	50%	25%	
Efficiency	**90.4%**				
Power factor				**0.84**	
Sound pressure level (1m)				**61**	dB(A)
Resistance R20 (open)					
Resistance R20 (Delta)					
Full load torque				**49.1**	Nm
Starting / Full load torque				**3.2**	
Pull up / Full load torque					
Pull out / Full load torque				**3.6**	
Starting / Full load current (DOL)				**8.6**	
Starting / Full load current (Y/D)					
Rotor Inertia					
Bearing DE				**6308**	
Bearing NDE				**6308**	

AmTecs Ltd
Charnham Park, Hungerford
Berkshire, RG17 0YT
Tel: +44 (0) 1488 686970
Fax: +44 (0) 1488 686968
sales@amtecs.co.uk
www.amtecs.co.uk

We make all efforts to better our products. Versions, technical data and figures could be changed therefore. They are not binding before written confirmation.