AMAH-IE3 90L4 (B3)

AMTECS

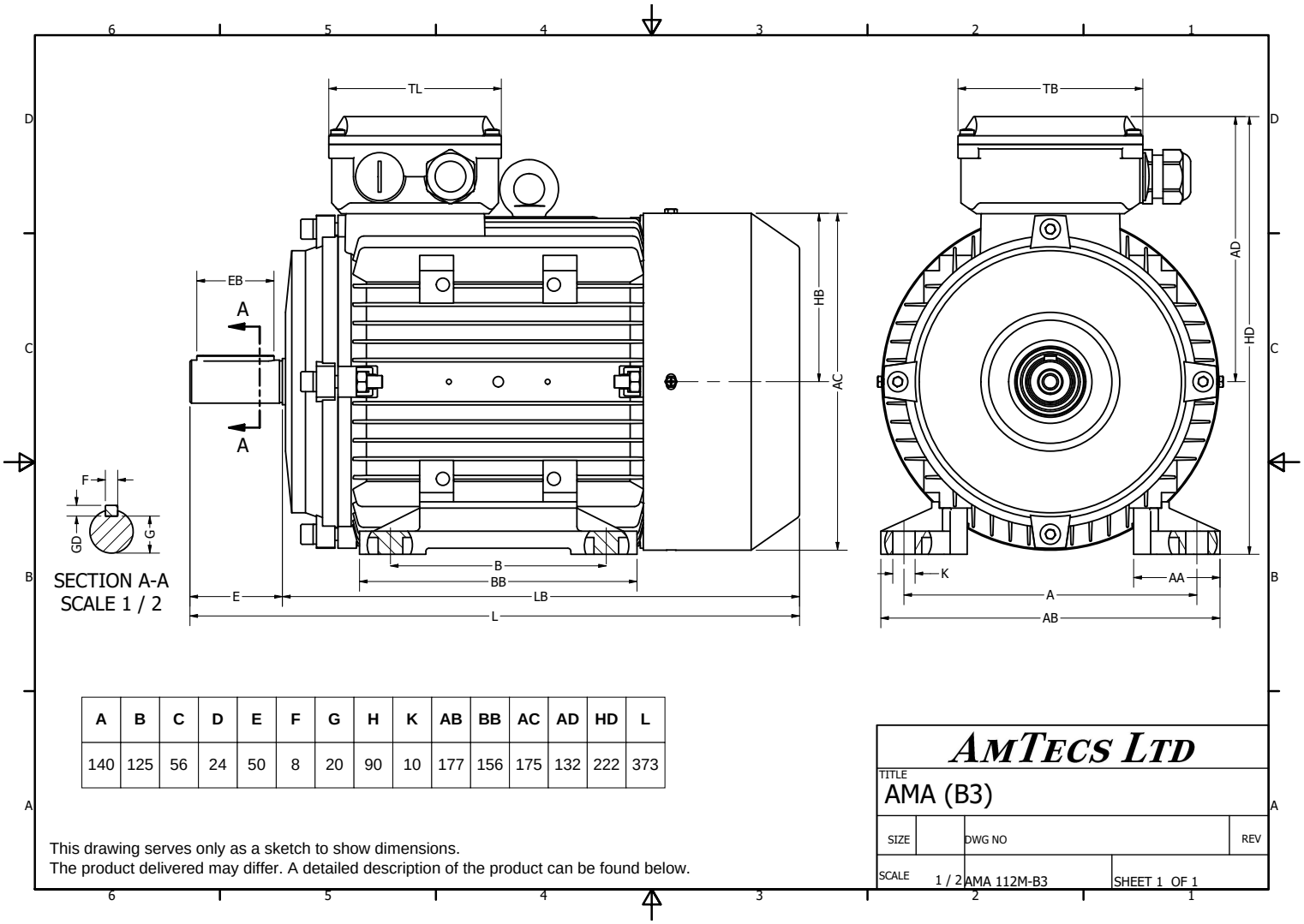

A	B	C	D	E	F	G	H	K	AB	BB	AC	AD	HD	L
140	125	56	24	50	8	20	90	10	177	156	175	132	222	373

AMTECS LTD

TITLE
AMA (B3)

SIZE | DWG NO | REV

SCALE 1 / 2 | AMA 112M-B3 | SHEET 1 OF 1

This drawing serves only as a sketch to show dimensions.
The product delivered may differ. A detailed description of the product can be found below.

Specification	**IEC 60034-1**		Efficiency class		**IE3**
Manufacturer	**AmTecs**		Load data	100%	75% 50% 25%
Motor type	**AMAH-IE3 90L4**		Efficiency	**86.7%**	
Rated power	**2.2** kW **S1** Duty		Power factor		**0.81**
Speed	**1455** rpm		Sound pressure level (1m)		**54** dB(A)
Voltage	**220V / 400V**		Resistance R20 (open)		
Frequency	**50** Hz		Resistance R20 (Delta)		
Connection	**Delta / Star**				
Full load current	**7.83 A / 4.52 A**		Full load torque		**14.4** Nm
No-load current			Starting / Full load torque		**2.2**
Enclosure	**IP55**		Pull up / Full load torque		
Insulation class	**F (temp. rise B)**		Pull out / Full load torque		**2.5**
Max. ambient temp	**40** °C				
Max. altitude	**1000** mtr above sea level				
Comment					
Cable entry	**M20 x 1.5**		Starting / Full load current (DOL)		**8.1**
Construction	**Aluminium**		Starting / Full load current (Y/D)		
Weight	**23** Kg		Rotor Inertia		
Type number			Bearing DE		**6205**
Warranty			Bearing NDE		**6205**

Protection Device	**PTC 150**

AmTecs Ltd
Charnham Park, Hungerford
Berkshire, RG17 0YT
Tel: +44 (0) 1488 686970
Fax: +44 (0) 1488 686968
sales@amtecs.co.uk
www.amtecs.co.uk

We make all efforts to better our products. Versions, technical data and figures could be changed therefore. They are not binding before written confirmation.