AMAH-IE3 100L4 (B3)

AMTECS

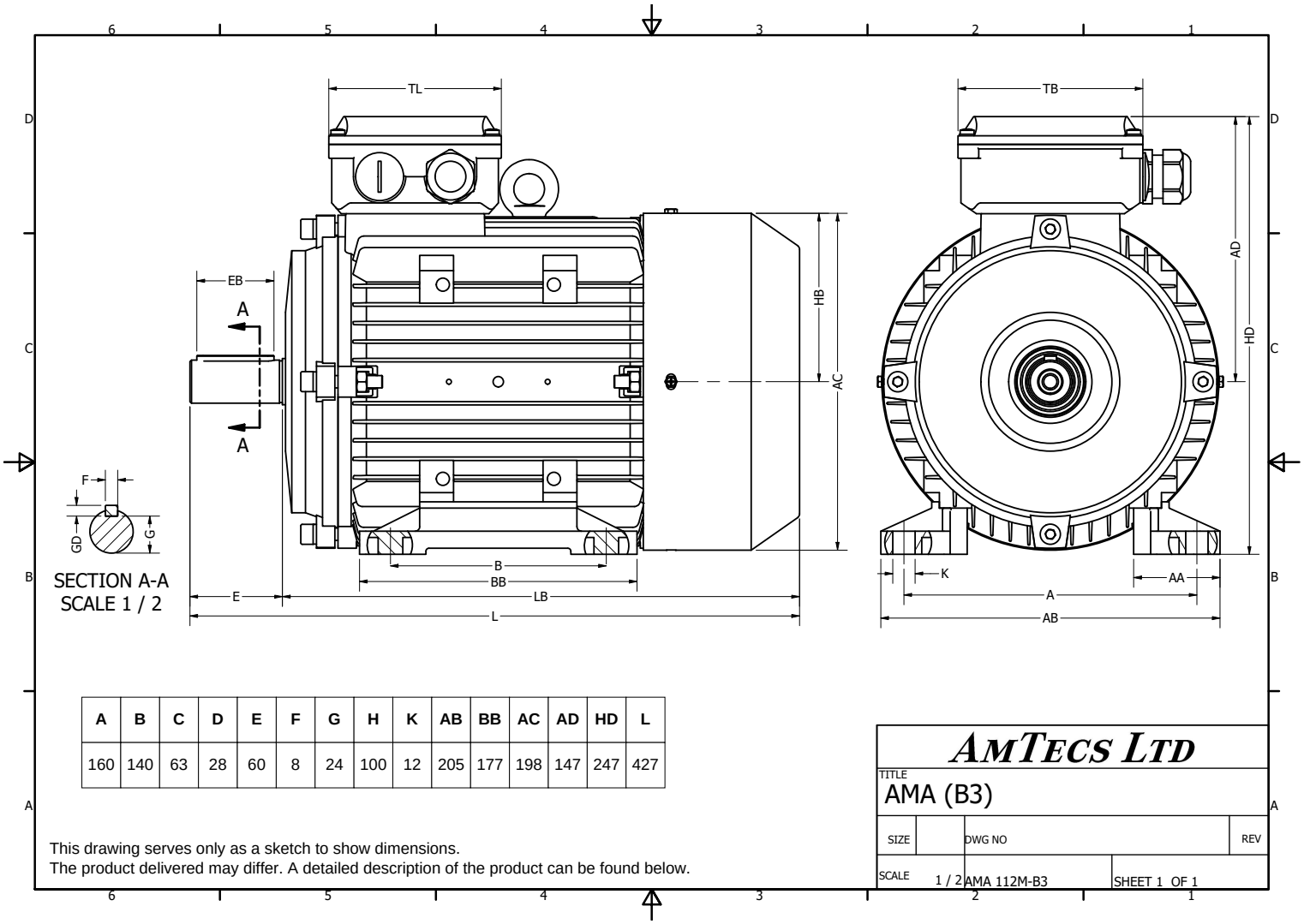

A	B	C	D	E	F	G	H	K	AB	BB	AC	AD	HD	L
160	140	63	28	60	8	24	100	12	205	177	198	147	247	427

This drawing serves only as a sketch to show dimensions.
The product delivered may differ. A detailed description of the product can be found below.

AMTECS LTD

TITLE
AMA (B3)

SIZE | DWG NO | REV

SCALE 1 / 2 | AMA 112M-B3 | SHEET 1 OF 1

Specification	**IEC 60034-1**	Efficiency class	**IE3**
Manufacturer	**AmTecs**	Load data	100% 75% 50% 25%
Motor type	**AMAH-IE3 100L4**	Efficiency	**88.6%**
Rated power	**4** kW **S1** Duty	Power factor	**0.82**
Speed	**1455** rpm	Sound pressure level (1m)	**56** dB(A)
Voltage	**400V / 690V**	Resistance R20 (open)	
Frequency	**50** Hz	Resistance R20 (Delta)	
Connection	**Delta / Star**		
Full load current	**7.95 A / 4.59 A**	Full load torque	**26.3** Nm
No-load current		Starting / Full load torque	**2.5**
Enclosure	**IP55**	Pull up / Full load torque	
Insulation class	**F (temp. rise B)**	Pull out / Full load torque	**3**
Max. ambient temp	**40** °C		
Max. altitude	**1000** mtr above sea level		
Comment			
Cable entry	**M20 x 1.5**	Starting / Full load current (DOL)	**8.8**
Construction	**Aluminium**	Starting / Full load current (Y/D)	
Weight	**36** Kg	Rotor Inertia	
Type number		Bearing DE	**6206**
Warranty		Bearing NDE	**6206**

Protection Device	**PTC 150**

AmTecs Ltd
Charnham Park, Hungerford
Berkshire, RG17 0YT
Tel: +44 (0) 1488 686970
Fax: +44 (0) 1488 686968
sales@amtecs.co.uk
www.amtecs.co.uk

We make all efforts to better our products. Versions, technical data and figures could be changed therefore. They are not binding before written confirmation.