AMAH-IE3 71G2 (B34L)

AMTECS

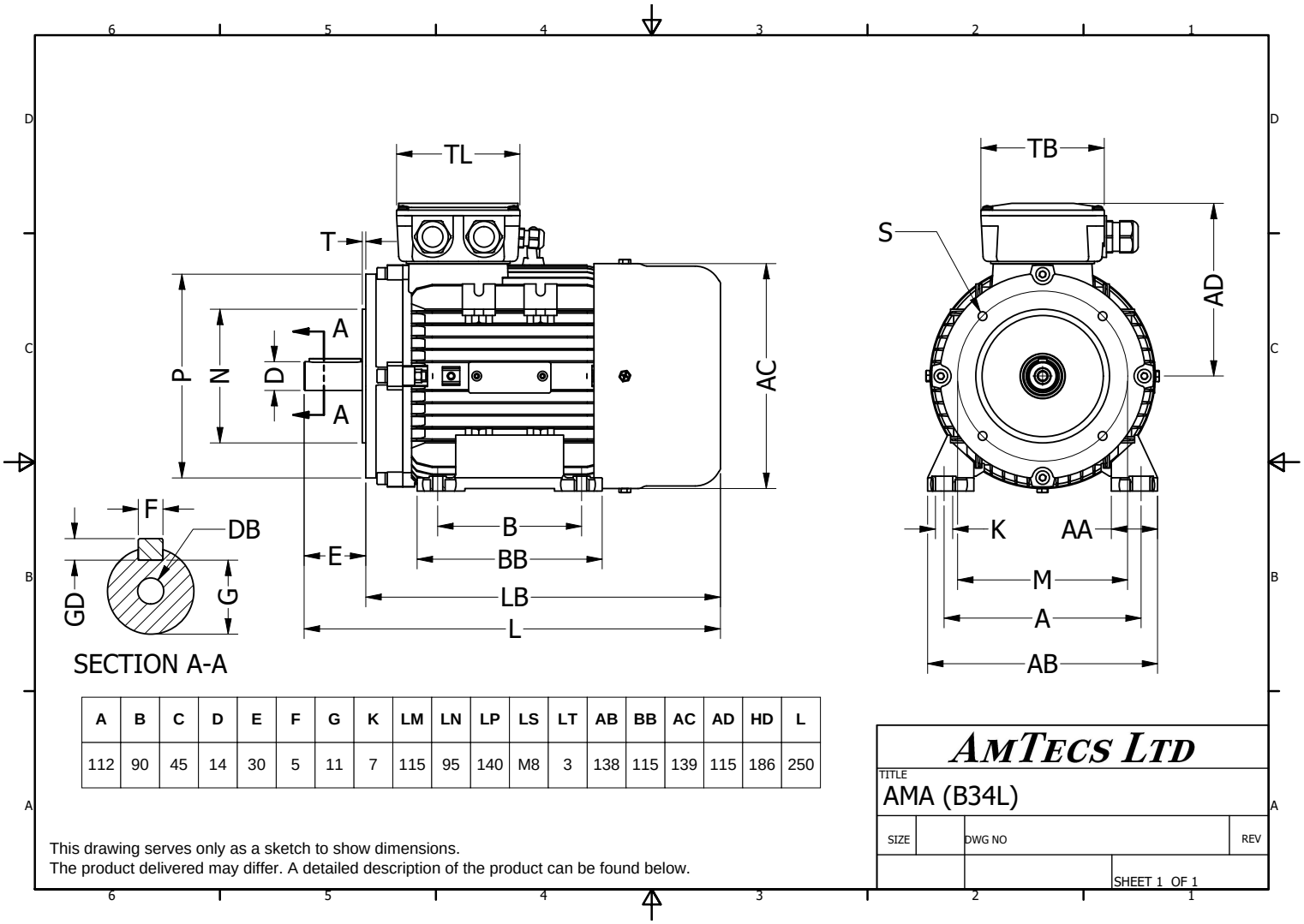

A	B	C	D	E	F	G	K	LM	LN	LP	LS	LT	AB	BB	AC	AD	HD	L
112	90	45	14	30	5	11	7	115	95	140	M8	3	138	115	139	115	186	250

AMTECS LTD

TITLE
AMA (B34L)

SIZE | DWG NO | REV

SHEET 1 OF 1

This drawing serves only as a sketch to show dimensions.
The product delivered may differ. A detailed description of the product can be found below.

Specification	**IEC 60034-1**		Efficiency class		**IE3**
Manufacturer	**AmTecs**		Load data	100% 75% 50% 25%	
Motor type	**AMAH-IE3 71G2**		Efficiency	**80.7%**	
Rated power	**0.75** kW **S1** Duty		Power factor		**0.79**
Speed	**2900** rpm		Sound pressure level (1m)		**54** dB(A)
Voltage	**220V / 400V**		Resistance R20 (open)		
Frequency	**50** Hz		Resistance R20 (Delta)		
Connection	**Delta / Star**				
Full load current	**2.94 A / 1.7 A**		Full load torque		**2.5** Nm
No-load current			Starting / Full load torque		**2.8**
Enclosure	**IP55**		Pull up / Full load torque		
Insulation class	**F (temp. rise B)**		Pull out / Full load torque		**2.6**
Max. ambient temp	**40** °C				
Max. altitude	**1000** mtr above sea level				
Comment					
Cable entry	**M20 x 1.5**		Starting / Full load current (DOL)		**8**
Construction	**Aluminium**		Starting / Full load current (Y/D)		
Weight	**8.7** Kg		Rotor Inertia		
Type number			Bearing DE		**6202**
Warranty			Bearing NDE		**6202**

Protection Device	**PTC 150**

AmTecs Ltd
Charnham Park, Hungerford
Berkshire, RG17 0YT
Tel: +44 (0) 1488 686970
Fax: +44 (0) 1488 686968
sales@amtecs.co.uk
www.amtecs.co.uk

We make all efforts to better our products. Versions, technical data and figures could be changed therefore. They are not binding before written confirmation.