AMA3-IE3 90L4 (B14L)

AMTECS

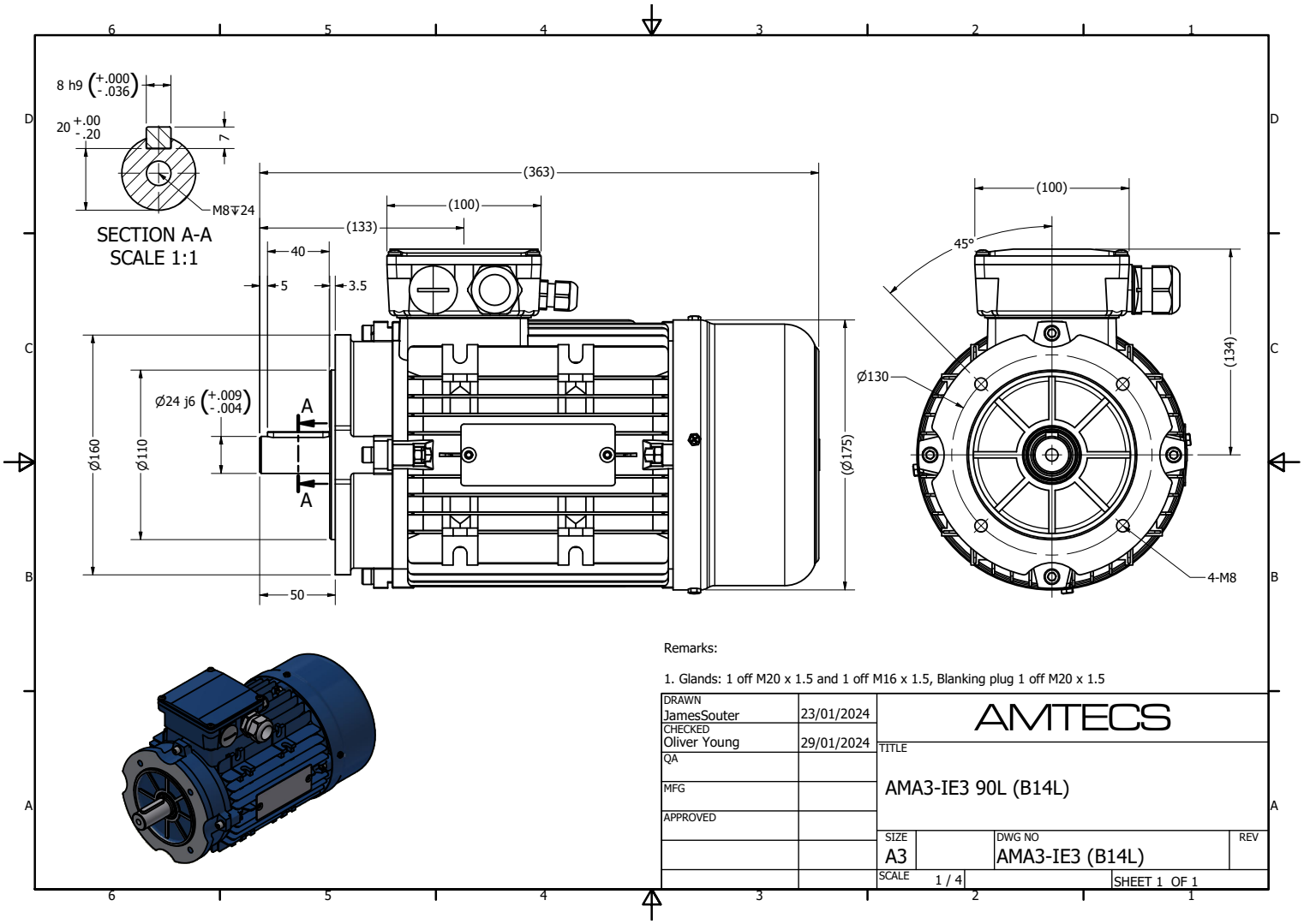

Remarks:

1. Glands: 1 off M20 x 1.5 and 1 off M16 x 1.5, Blanking plug 1 off M20 x 1.5

DRAWN	JamesSouter	23/01/2024	AMTECS
CHECKED	Oliver Young	29/01/2024	TITLE: AMA3-IE3 90L (B14L)
QA			
MFG			
APPROVED			
SIZE: A3	DWG NO: AMA3-IE3 (B14L)	REV	
SCALE: 1 / 4	SHEET 1 OF 1		

Specification	**IEC 60034-1**		Efficiency class	**IE3**
Manufacturer	**AmTecs**		Load data	100% 75% 50% 25%
Motor type	**AMA3-IE3 90L4**		Efficiency	**85.3%**
Rated power	**1.5** kW	**S1** Duty	Power factor	**0.77**
Speed	**1445** rpm		Sound pressure level (1m)	**54** dB(A)
Voltage	**220V / 400V**		Resistance R20 (open)	
Frequency	**50** Hz		Resistance R20 (Delta)	
Connection	**Delta / Star**			
Full load current	**5.73 A / 3.3 A**		Full load torque	**9.91** Nm
No-load current			Starting / Full load torque	**2.9**
Enclosure	**IP55**		Pull up / Full load torque	
Insulation class	**F (temp. rise B)**		Pull out / Full load torque	**3.2**
Max. ambient temp	**40** °C			
Max. altitude	**1000** mtr above sea level			
Comment				
Cable entry	**M20 x 1.5**		Starting / Full load current (DOL)	**8.1**
Construction	**Aluminium**		Starting / Full load current (Y/D)	
Weight	**22.5** Kg		Rotor Inertia	
Type number			Bearing DE	**6205**
Warranty			Bearing NDE	**6205**

AmTecs Ltd
Charnham Park, Hungerford
Berkshire, RG17 0YT
Tel: +44 (0) 1488 686970
Fax: +44 (0) 1488 686968
sales@amtecs.co.uk
www.amtecs.co.uk

We make all efforts to better our products. Versions, technical data and figures could be changed therefore. They are not binding before written confirmation.