AMAH-IE3 100LX2 (B3)

AMTECS

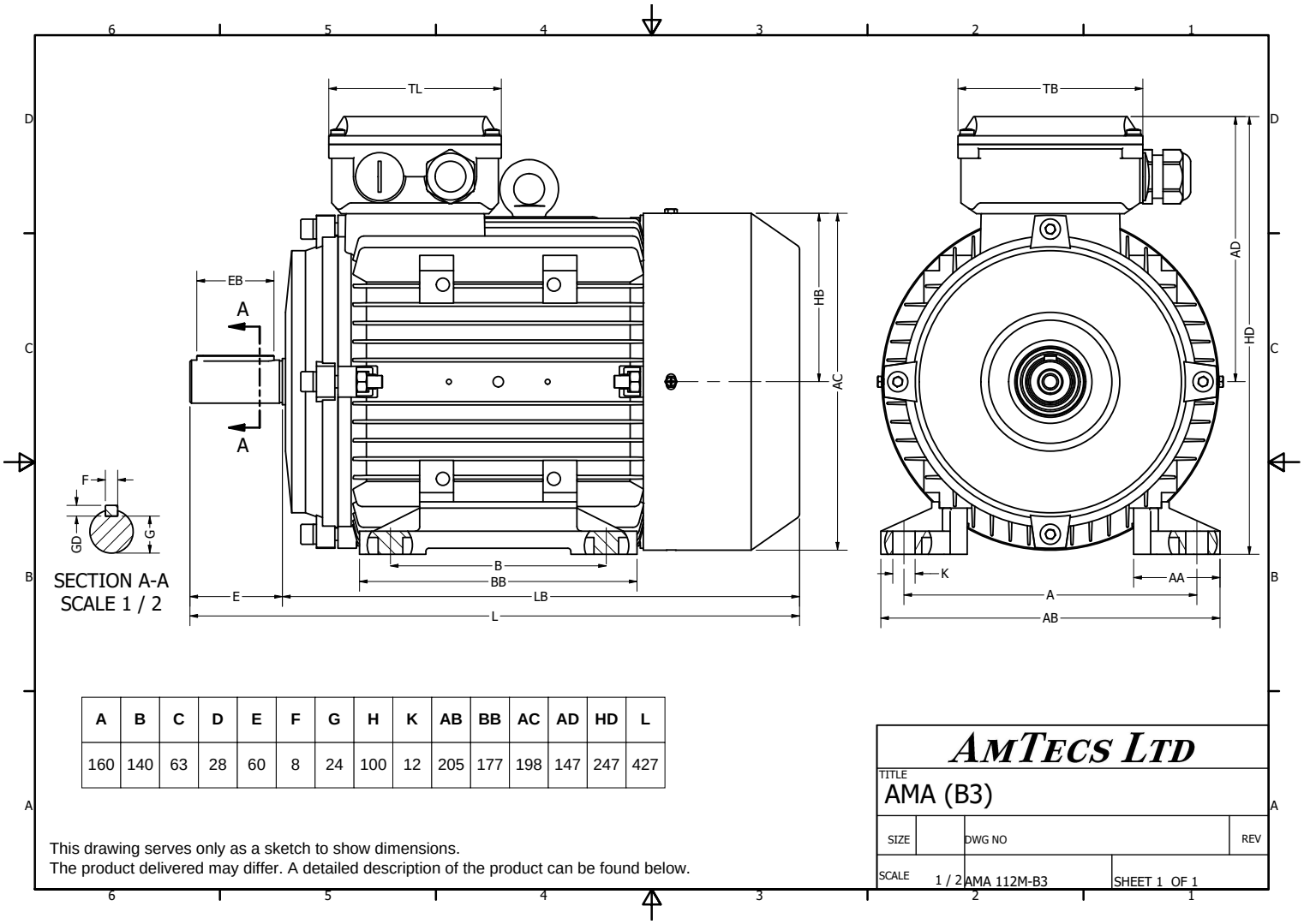

A	B	C	D	E	F	G	H	K	AB	BB	AC	AD	HD	L
160	140	63	28	60	8	24	100	12	205	177	198	147	247	427

This drawing serves only as a sketch to show dimensions.
The product delivered may differ. A detailed description of the product can be found below.

AMTECS LTD

TITLE
AMA (B3)

SIZE | DWG NO | REV

SCALE 1 / 2 | AMA 112M-B3 | SHEET 1 OF 1

Specification	**IEC 60034-1**			
Manufacturer	**AmTecs**			
Motor type	**AMAH-IE3 100LX2**			
Rated power	**4** kW	**S1** Duty		
Speed	**2910** rpm			
Voltage	**400V / 690V**			
Frequency	**50** Hz			
Connection	**Delta / Star**			
Full load current	**7.8 A / 4.5 A**			
No-load current				
Enclosure	**IP55**			
Insulation class	**F (temp. rise B)**			
Max. ambient temp	**40** °C			
Max. altitude	**1000** mtr above sea level			
Comment				
Cable entry	**M20 x 1.5**			
Construction	**Aluminium**			
Weight	**32** Kg			
Type number				
Warranty				
Protection Device	**PTC 150**			

Efficiency class		**IE3**		
Load data	100%	75%	50%	25%
Efficiency	**88.1%**			
Power factor		**0.9**		
Sound pressure level (1m)		**65** dB(A)		
Resistance R20 (open)				
Resistance R20 (Delta)				
Full load torque		**13.1** Nm		
Starting / Full load torque		**2.2**		
Pull up / Full load torque				
Pull out / Full load torque		**2.3**		
Starting / Full load current (DOL)		**8.5**		
Starting / Full load current (Y/D)				
Rotor Inertia				
Bearing DE		**6206**		
Bearing NDE		**6206**		

AmTecs Ltd
Charnham Park, Hungerford
Berkshire, RG17 0YT
Tel: +44 (0) 1488 686970
Fax: +44 (0) 1488 686968
sales@amtecs.co.uk
www.amtecs.co.uk

We make all efforts to better our products. Versions, technical data and figures could be changed therefore. They are not binding before written confirmation.