# AMA3-IE3 132SX2 (B3)

AMTECS

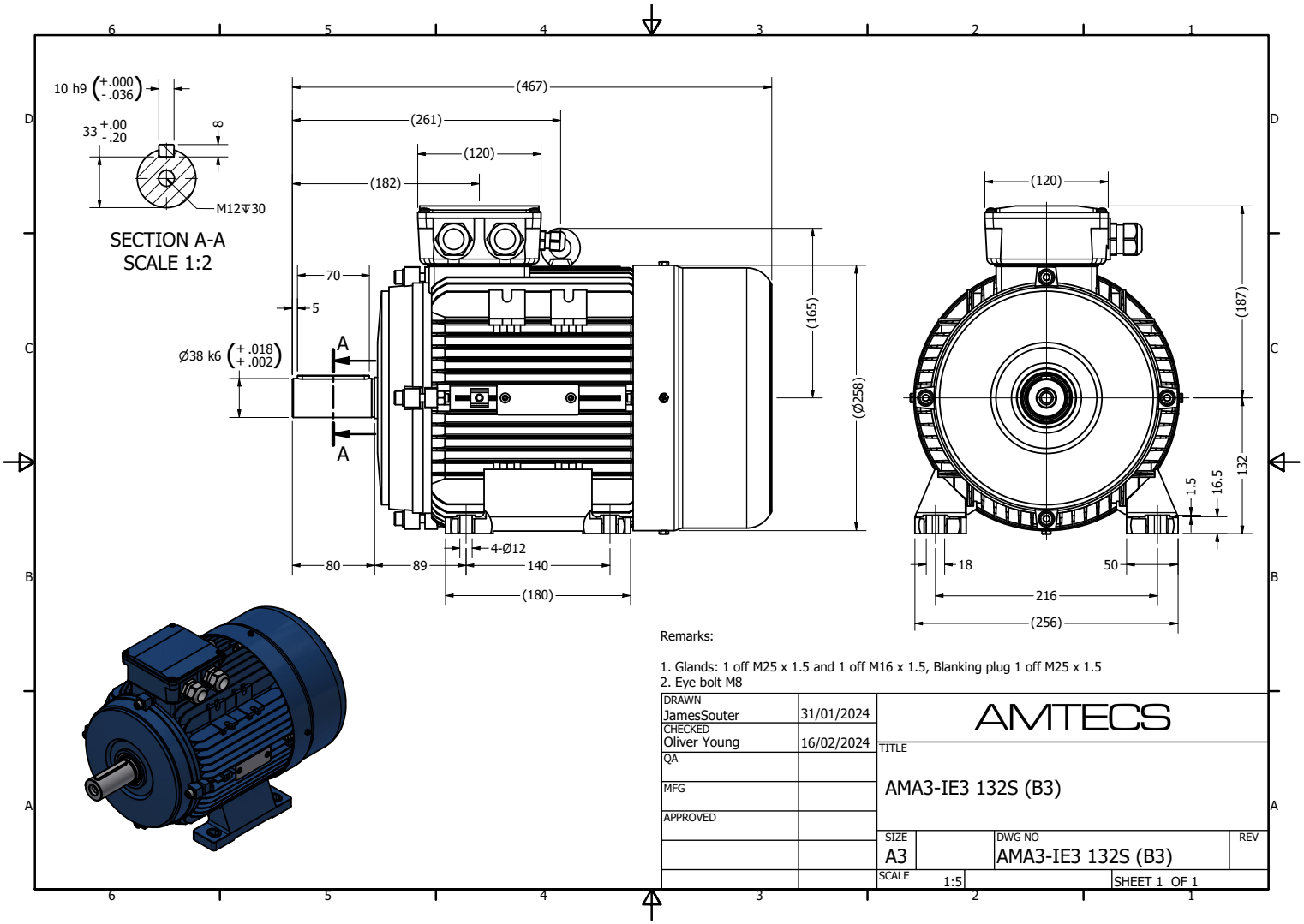


| | | | |
|---|---|---|---|
| Specification | **IEC 60034-1** | Efficiency class | **IE3** |
| Manufacturer | **AmTecs** | Load data | 100% 75% 50% 25% |
| Motor type | **AMA3-IE3 132SX2** | Efficiency | **90.1%** |
| Rated power | **7.5** kW **S1** Duty | Power factor | **0.88** |
| Speed | **2925** rpm | Sound pressure level (1m) | **70** dB(A) |
| Voltage | **400V / 690V** | Resistance R20 (open) | |
| Frequency | **50** Hz | Resistance R20 (Delta) | |
| Connection | **Delta / Star** | | |
| Full load current | **13.7 A / 7.91 A** | Full load torque | **24.5** Nm |
| No-load current | | Starting / Full load torque | **2.5** |
| Enclosure | **IP55** | Pull up / Full load torque | |
| Insulation class | **F (temp. rise B)** | Pull out / Full load torque | **3** |
| Max. ambient temp | **40** °C | | |
| Max. altitude | **1000** mtr above sea level | | |
| Comment | | | |
| Cable entry | **M25 x 1.5** | Starting / Full load current (DOL) | **8.5** |
| Construction | **Aluminium** | Starting / Full load current (Y/D) | |
| Weight | **55** Kg | Rotor Inertia | |
| Type number | | Bearing DE | **6308** |
| Warranty | | Bearing NDE | **6308** |


**AmTecs Ltd**
Charnham Park, Hungerford
Berkshire, RG17 0YT
Tel: +44 (0) 1488 686970
Fax: +44 (0) 1488 686968
sales@amtecs.co.uk
www.amtecs.co.uk



*We make all efforts to better our products. Versions, technical data and figures could be changed therefore. They are not binding before written confirmation.*