AMA3-IE3 100L6 (B14L)

AMTECS

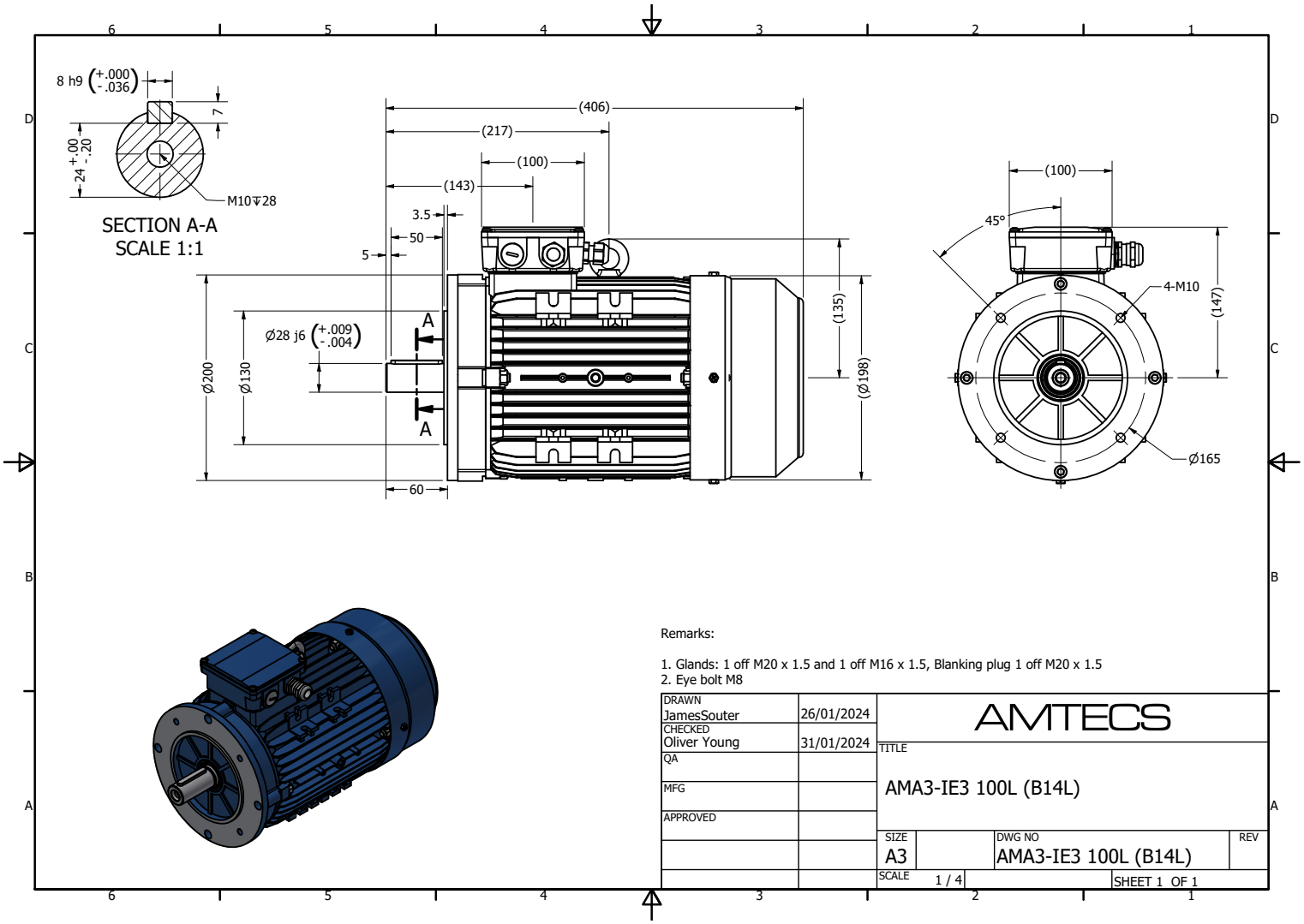

Remarks:

1. Glands: 1 off M20 x 1.5 and 1 off M16 x 1.5, Blanking plug 1 off M20 x 1.5
2. Eye bolt M8

DRAWN	JamesSouter	26/01/2024	AMTECS
CHECKED	Oliver Young	31/01/2024	TITLE: AMA3-IE3 100L (B14L)
QA			
MFG			
APPROVED			SIZE: A3 — DWG NO: AMA3-IE3 100L (B14L) — REV
			SCALE: 1 / 4 — SHEET 1 OF 1

Specification	**IEC 60034-1**		Efficiency class		**IE3**
Manufacturer	**AmTecs**		Load data	100% 75% 50% 25%	
Motor type	**AMA3-IE3 100L6**		Efficiency	**82.5%**	
Rated power	**1.5** kW **S1** Duty		Power factor		**0.73**
Speed	**960** rpm		Sound pressure level (1m)		**53** dB(A)
Voltage	**220V / 400V**		Resistance R20 (open)		
Frequency	**50** Hz		Resistance R20 (Delta)		
Connection	**Delta / Star**				
Full load current	**6.25 A / 3.59 A**		Full load torque		**14.9** Nm
No-load current			Starting / Full load torque		**2.6**
Enclosure	**IP55**		Pull up / Full load torque		
Insulation class	**F (temp. rise B)**		Pull out / Full load torque		**3.1**
Max. ambient temp	**40** °C				
Max. altitude	**1000** mtr above sea level				
Comment					
Cable entry	**M20 x 1.5**		Starting / Full load current (DOL)		**6.5**
Construction	**Aluminium**		Starting / Full load current (Y/D)		
Weight	**30** Kg		Rotor Inertia		
Type number			Bearing DE		**6206**
Warranty			Bearing NDE		**6206**

AmTecs Ltd
Charnham Park, Hungerford
Berkshire, RG17 0YT
Tel: +44 (0) 1488 686970
Fax: +44 (0) 1488 686968
sales@amtecs.co.uk
www.amtecs.co.uk

We make all efforts to better our products. Versions, technical data and figures could be changed therefore. They are not binding before written confirmation.